Cross Section View of
Blowdown Heat Recovery "The Energy Tank"tm
Blowdown Water / Steam Flow

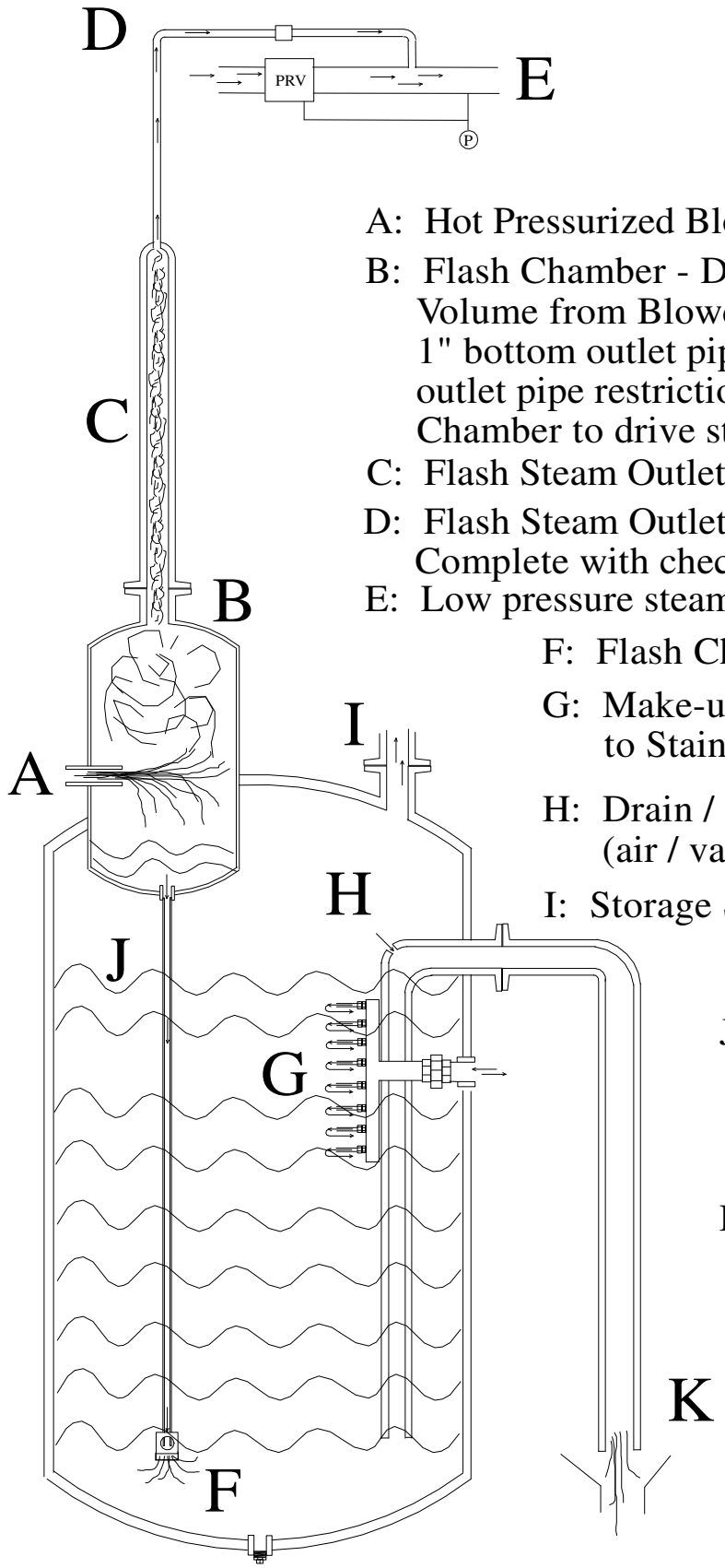

A: Hot Pressurized Blowdown Inlet (1 1/2")

B: Flash Chamber - Depressurization and Small Water Volume from Blowdown volume due to restriction in 1" bottom outlet piping. Water volume and bottom outlet pipe restriction allows pressure to build in Flash Chamber to drive steam into deaerator steam flow.

C: Flash Steam Outlet 3" low velocity

D: Flash Steam Outlet - 1" high velocity Complete with check valve.

E: Low pressure steam to deaerator

F: Flash Chamber Outlet to Storage Section

G: Make-up Water Inlet / Outlet to Stainless Steel Heat Exchanger

H: Drain / overflow antisiphon hole (air / vapour to drain)

I: Storage Section Atmospheric Vent

J: Normal Water Level - just below loop drain overflow.

K: Atmospheric drain to floor sewer/drain